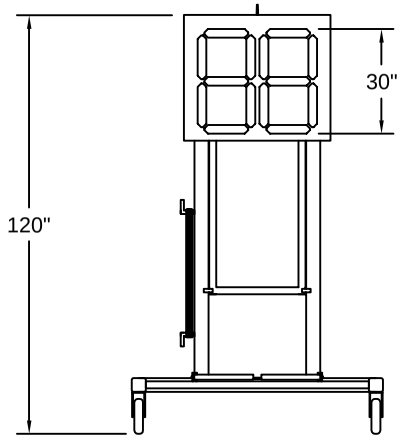

Front

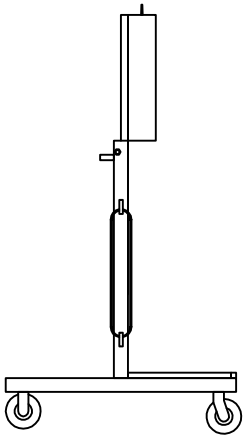

Left Side

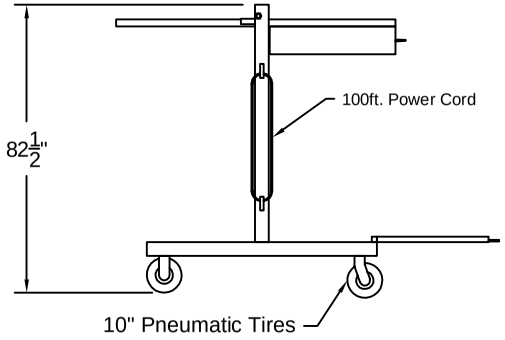

Transport Position

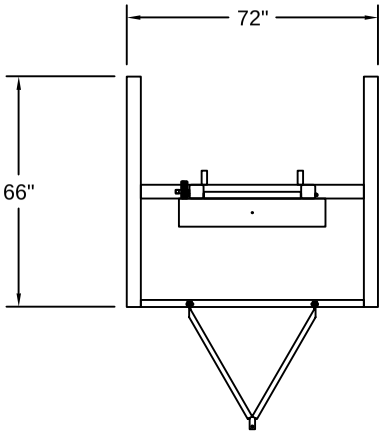

Top

Specifications

Electrical: 120 Volt, 50-60 Hz, 60 Watt

Weight: = 240 lb.

Construction: Heavy Gauge Steel Tubing

Finish: Black Epoxy

REV	DESCRIPTION	DATE	BY	APP	REV	DESCRIPTION	DATE	BY	APP
0	Initial	03/05/06	JJG	JEG					

Grimm Scientific Industries, Inc.

P.O. Box 2143 Marietta, OH 45750 www.grimmscientific.com

#1230 Mobile Stand

SIZE	SCALE	DWG NO.
A	NTS	